COMPAL CONFIDENTIAL

MODEL NAME: JALA0
PCB NAME: LS-4221P FP/B
COMPAL P/N: DA600007Z10
REVISION: 1.0
DATE: 2008/4/10

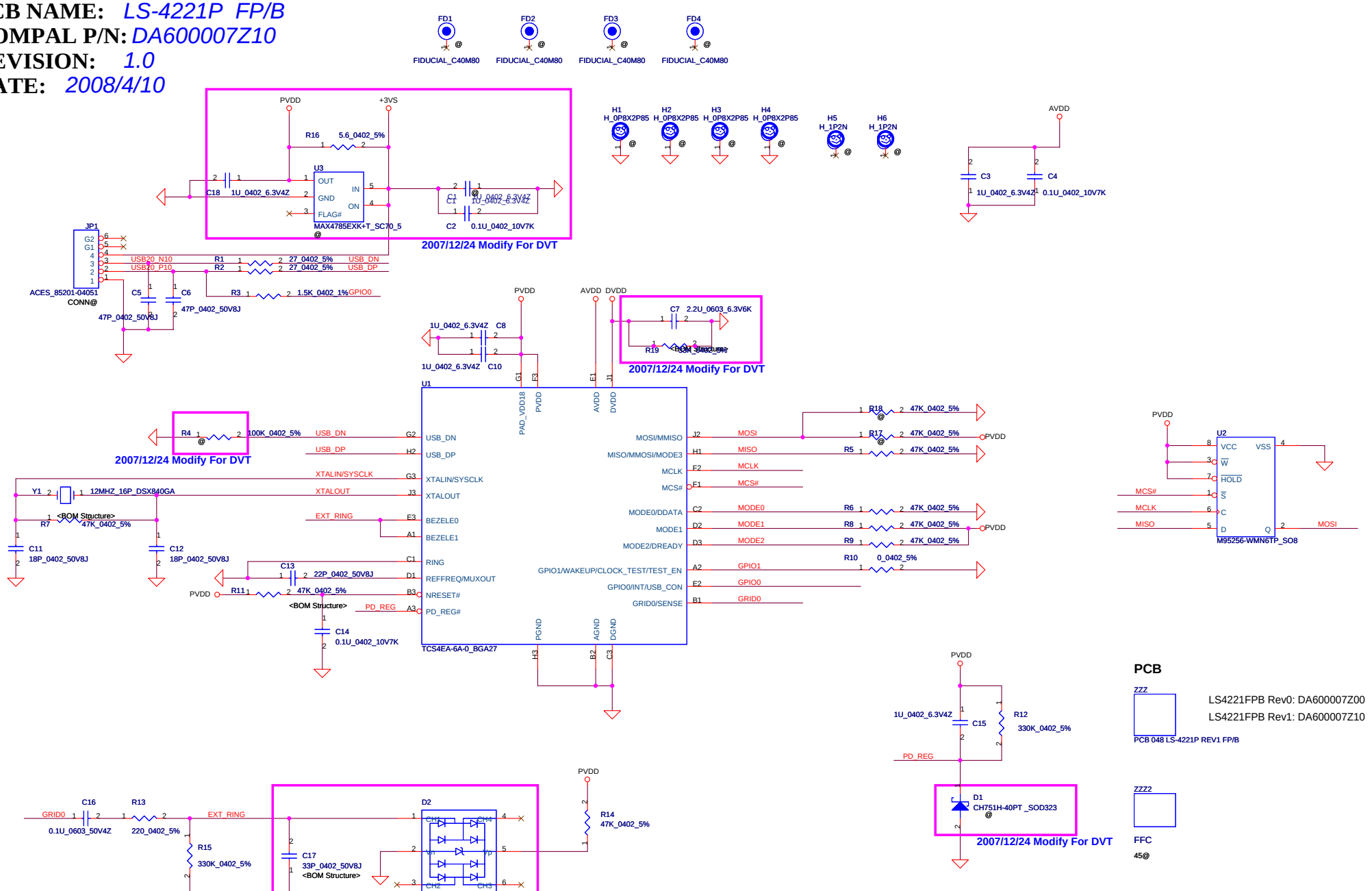

Security Classification	Compal Secret Data		
Issued Date	2007/08/01	Deciphered Date	2008/08/01

THIS SHEET OF ENGINEERING DRAWING IS THE PROPRIETARY PROPERTY OF COMPAL ELECTRONICS, INC. AND CONTAINS CONFIDENTIAL AND TRADE SECRET INFORMATION. THIS SHEET MAY NOT BE TRANSFERED FROM THE CUSTODY OF THE COMPETENT DIVISION OF R&D DEPARTMENT EXCEPT AS AUTHORIZED BY COMPAL ELECTRONICS, INC. NEITHER THIS SHEET NOR THE INFORMATION IT CONTAINS MAY BE USED BY OR DISCLOSED TO ANY THIRD PARTY WITHOUT PRIOR WRITTEN CONSENT OF COMPAL ELECTRONICS, INC.

Compal Electronics, Inc.

Title: SCHEMATIC FINGERPRINT/B S4221

Size	Document Number	Rev
Custom	4059L8	B

Date: Friday, April 25, 2008 Sheet 1 of 2